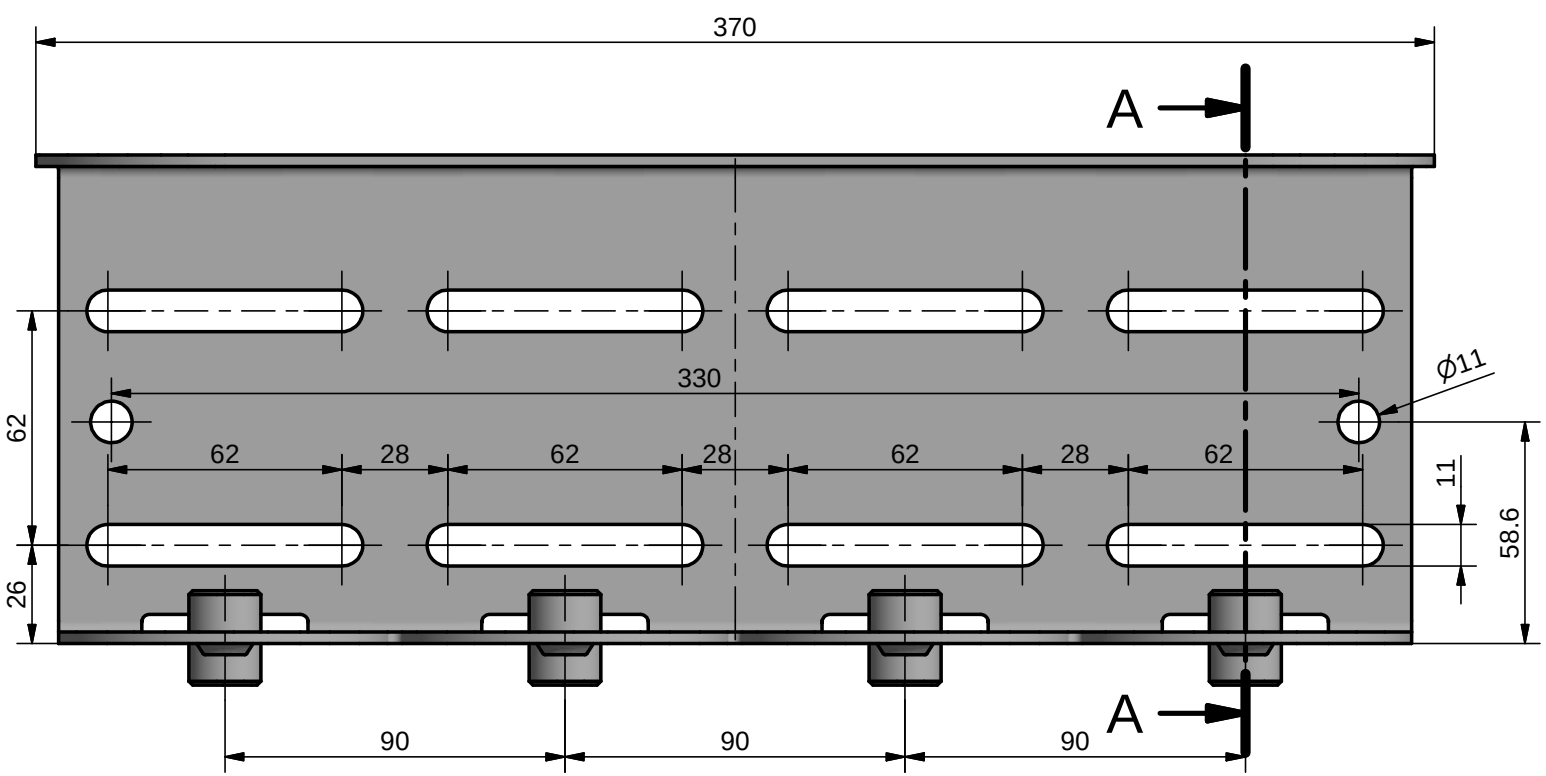

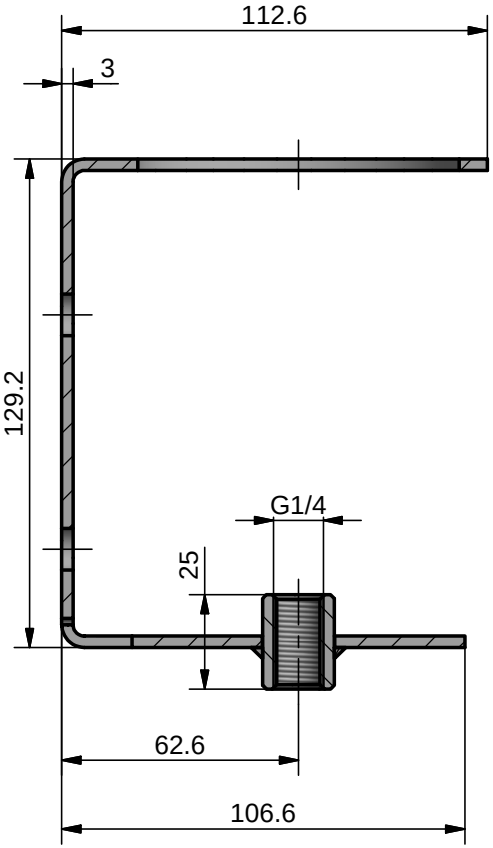

A-A (1 : 2)

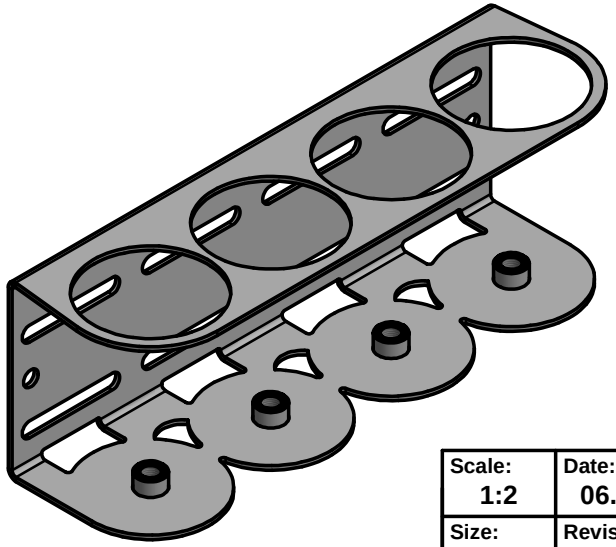

Scale:	Date:	Material:	Description:
1:2	06.06.2016	stainless steel	Bracket STAR Heavy Duty C-Section 4-point G1/4 female (stainless steel) Montagehalterung STAR Heavy Duty C-Form 4-fach G1/4i (Edelstahl)
Size:	Revision / drawn:	Part No.	
A4	B / cst	109674	

perma
perma-tec GmbH & Co. KG
Hammelburger Str.21
97717 EUERDORF / GERMANY
Tel. : +49 9704 609-0
Fax : +49 9704 609-50